ecosmart™ Fire

Fire & Ice Coffee Tabe

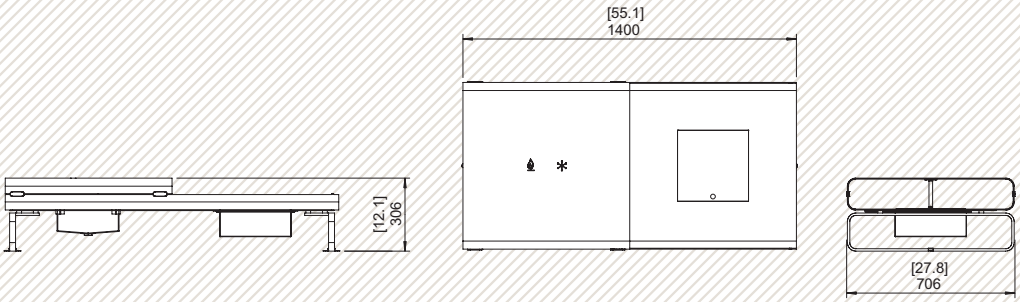

© Copyright 2004 - 2009 The Fire Company Pty Ltd - International Patent Pending - Trademark Registered - All Designs Registered. www.ecosmartfire.com